Express® Lavatory System — MG-Series
Model MG-2

- **ADA and TAS Compliant**
- **Serves One or Two Users at a Time**
- **Standard Lavatory Spacing on 30" Centers**
- **Continuous Bowl, Sprayhead and End Caps are Constructed of Terreon® Solid Surface Material**
- **Available in 24 Colors**
- **Reliable Plug-in, Battery or ndite™ Powered Infrared Activation, Pushbutton Air Valve, or Touch Time™ Metering Control**
- **Optional Electric Tankless Water Heater**

Model MG-2/IR

Specifications

The flowing "wave like" design accommodates one to two users. Units handle washroom traffic quickly and economically while providing each user with personal space. Lavatories for the system are positioned on 30" centers. Bradley's continuous bowl features a contemporary flowing "wave" design. This unique "wave" pattern is repeated in the sprayhead, integrating the components. The preassembled sprayhead module is equipped with independent aerators, each served by separate infrared sensing module and solenoid valve (Model MG-2/IR) or (Model MG-2/NDT), pushbutton air metering valve (Model MG-2/AST4) a pushbutton Touch Time™ electronic metering control (Model MG-2/TT) or an independent battery IR sensor and batteries (Model MG-2/BIR3). Operating range is 20-80 PSI. Flow restrictor keeps flow rate constant at all pressures. Flowrate: .5 GPM

Construction

Bowl, Sprayhead and Pedestal End Caps

Constructed of Terreon®, a densified solid surface material composed of polyester resin. Terreon® is resistant to chemicals, stains, burns, and impact. Surface damage can be easily repaired with everyday cleansers or fine grit abrasives.

Support Frame and Access Panel

Bowl assembly and pedestal end caps are secured to a heavy-gauge stainless steel support frame mounted to the wall. The contoured front access panel is constructed of 300 series stainless steel.

Vandal Resistance

The molded solid surface sprayhead is an integral part of the bowl module. A free spinning collar protects the aerator from vandalism. The infrared sensor will automatically shut off water flow after 30-45 seconds if a vandal attempts to trigger constant operation by covering the sensor, or by placing a stationary object in the sensor's detection area. Pushbuttons are secured to the unit from inside the sprayhead. Air valves, water supplies and waste are concealed within the pedestal/support frame assembly.

Code Compliance and Certifications

ANSI Standards:

Terreon® is NAHB certified to meet ANSI Z124.3, Z124.6 and ANSI/ICPA SS-1-2001.

UPC Approval:

The Express Lav Systems are Uniform Plumbing Code (UPC) approved through the International Association of Plumbing and Mechanical Officials (IAPMO).

Standard Height Mounting

The Express Lavatory System model MG-2 mounted at standard height is designed to comply with all ADA guidelines on reaches, clearances and operation. To comply with ADA, the rim height of the Express Lavatory System bowl must be 33.5" maximum above the finished floor.

Juvenile Height Mounting

The Express Lavatory System model MG-2 is designed to mount at different heights to comply with guidelines on reaches, clearances and operation for various codes including, ADA Accessibility Guidelines for Buildings and Facilities (ADAAG) and TAS (Texas Accessibility Standards). Always check your local and state codes.

Standard Equipment

Continuous bowl with two lavatories, sprayhead, pedestal, stainless steel mounting frame (as described at left), 110/24 VAC plug-in transformer (Model MG-2/IR and Model MG-2/TT). Batteries are included in (Model MG-3/BIR3). The following fittings are provided: P-trap; tailpiece; two flexible stainless steel supply connections; and Vernatherm™ thermostatic mixing valve with combination stop, strainer and check valves.

Document No. 1051

This information is subject to change without formal notice.
© 2003 Bradley Corporation
7-21-2005 (6 pages total)

Bradley
P.O. Box 309, Menomonee Falls, WI 53052-0309
Phone 1-800-BRADLEY FAX 262-251-5817
http://www.bradleycorp.com

Express® Lavatory System — MG-Series
Model MG-2

PLUMBING FIXTURES
TECHNICAL DATA

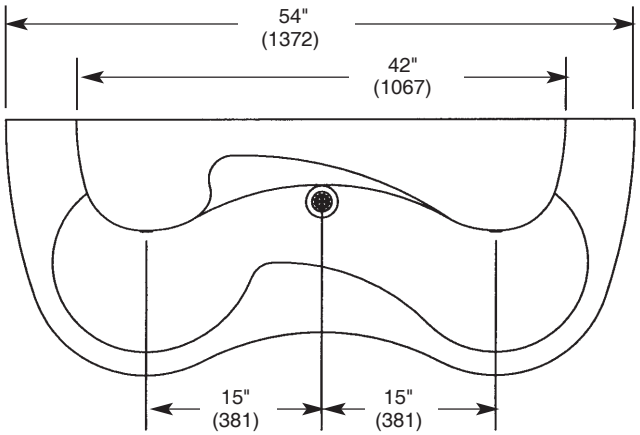

TOP VIEW

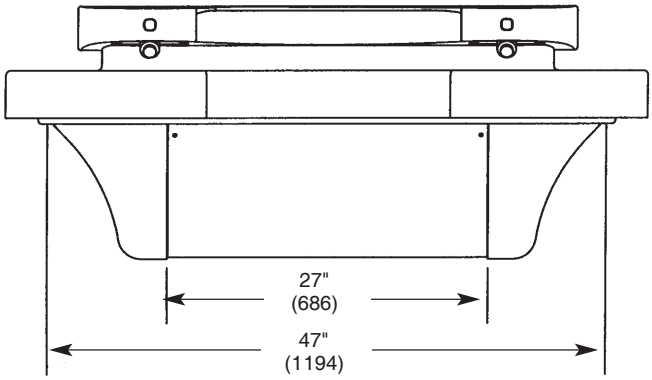

FRONT VIEW

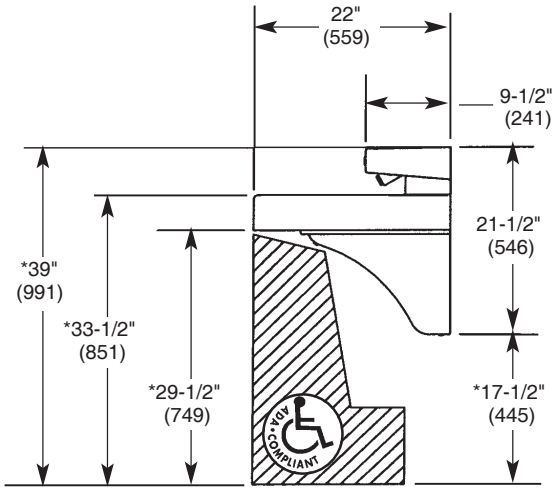

SIDE VIEW

Dimensions in parentheses are in millimeters
* Subtract 4" from all vertical dimensions for Juvenile Height Mounting.
Subtract 3.5" from all vertical dimensions for TAS Juvenile Height Mounting (grades Pre-K thru 5 or 6).
Subtract 1.5" from all vertical dimensions for TAS Juvenile Height Mounting (grades 6 thru 8 or 9).

TAS

Bradley Corporation reserves the right to make changes in design and material without formal notice and without incurring obligation.
Verify all rough-in dimensions prior to installation.

Express® Lavatory System — MG-Series
Model MG-2

Dimensions shown in parentheses are millimeters.

MOUNTING FOR STANDARD HEIGHT IS SHOWN

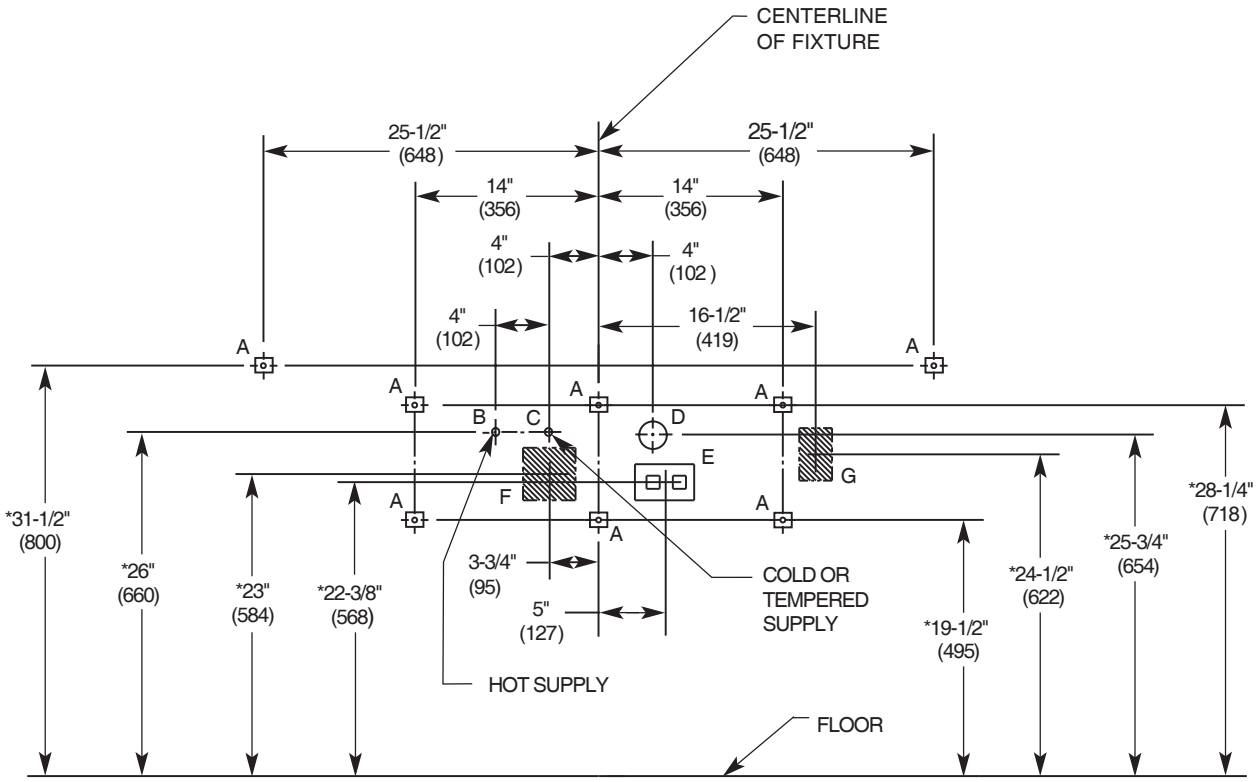

CHART 1

STANDARD HEIGHT	VERTICAL HEIGHT ADJUSTMENTS	FIXTURE STYLE
*	NONE	STANDARD HEIGHT
*	SUBTRACT 4"	JUVENILE HEIGHT
*	SUBTRACT 1-1/2"	TAS, GRADES 6 THROUGH 8/9
*	SUBTRACT 3-1/2"	TAS, PRE-K THROUGH 5/6

CHART 2

CODE	DESCRIPTION	QTY.
"A"	3/8" WALL ANCHORS WITH A MINIMUM PULL OUT FORCE OF 1000 lbs.	8
"B"	1/2" NPT HOT SUPPLY, STUB OUT 2" FROM WALL.	1
"C"	1/2" NPT COLD OR TEMPERED SUPPLY, STUB OUT 2" FROM WALL.	1
"D"	1-1/2" NPT DRAIN, STUB OUT 2" FROM WALL.	1
"E"	110V GFCI PROTECTED ELEC. OUTLET. I.R. AND TOUCH TIME ONLY.	1
"F"	OPTIONAL HEATER, ELECTRIC BOX LOCATION. 4" L X 3" W X 4" H - OPTION 1	1
"G"	OPTIONAL HEATER, ELECTRIC BOX LOCATION. 2-1/2" L X 3" W X 4" H - OPTION 2	1

Bradley Corporation reserves the right to make changes in design and material without formal notice and without incurring obligation.
Verify all rough-in dimensions prior to installation.

Express® Lavatory System — MG-Series
Model MG-2

Optional Equipment

Express Lavatory System Thermostatic Electric Tankless Water Heater

The optional tankless electric water heater is equipped with a microprocessing temperature control capable of maintaining outlet temperature accuracy of +/- 1° F. Factory preset at 105° F. Flow switch activates heater only on demand with 99% efficiency. For easy service, the heater features a replacement cartridge element. Heaters not available with BIR3 or NDT activations.

Model	KW	VAC	Amps	Temp Rise @ 1 GPM
EX95TMLB	9.5	240/208*	40	65° F
EX100TMLB	10	277	36	68° F

* 240 volt can also be rated 208 volts with a 25% reduction in power.

Soap Dispensers

One horizontally mounted pump style valve is located over the drain. Soap tank is located within the stainless steel frame. Soap tank is refillable through an easily accessible exterior filler cap. Filler cap is vandal resistant and opens with special spanner wrench included. Soap tank capacity is 3/4 of a gallon.

Activation Controls

Infrared Sensor (Model MG-2/IR)

The sensor module uses a conical infrared transmitting beam, creating a wide detection area. Adaptive-style sensor shall learn installation environment upon power-up and react (activate) when the user's hands enter the detection area. A timing turn-off delay of 2-3 seconds results in a smooth, controlled hand-washing operation. The Bradley adaptive sensor is not affected by varying color tones or darkness. Direct sunlight or bright washroom lights (up to 10,000 foot candles) will not activate the system.

- Solenoids – 24V, 50/60 Hz, 1/8" NPT. The electronically activated solenoid valve provides reliable performance since there are few moving parts, and its operation is unaffected by most chemicals and minerals often present in municipal water supplies. Neither the solenoid valve nor the infrared sensor module need adjustment for range or timing.
- Low-voltage Transformer – A Class II, UL/CSA-listed 110/24 VAC, plug-in transformer powers the solenoid valves. The transformer, furnished as standard equipment, plugs into a standard GFCI protected electrical outlet.

Pushbutton Control (Model MG-2/AST4)

Each pushbutton activates a non-hold-open air valve with field adjustable timing from 0–45 seconds. Factory set at 10 seconds. Each pushbutton activates one valve which, in turn, activates one hand washing station.

Touch Time™ Metering Control (Model MG-2/TT)

Each low voltage pushbutton actuates a non-hold-open, slow closing anti-hammer solenoid valve that is timed from an electronic potted assembly. Each pushbutton activates one valve, which, in turn, activates one station (streamformer). Touch Time™ controls water flow at each station through the use of solid state, digital circuitry. Timing is electronically controlled at 15 seconds.

Battery Operated Infrared Sensor (Model MG-2/BIR3)

Each battery powered sensor uses a zone-focused infrared transmitting beam, creating a large detection area. The sensor is not affected by varying skin tones or darkness. When hands enter the detection area, the sensor starts water flow by opening the valve electronically. When hands leave the detection area, the sensor stops the flow of water by closing the valve. The 6-volt DC, electronically activated solenoid valve has few moving parts providing reliable operation that is unaffected by most chemicals and minerals often present in municipal water supplies. Each station is powered by a single lithium battery. Battery type is Duracell® DL 223A or equivalent (batteries included).

ndite™ Powered Infrared Control (Model MG-2/NDT)

The photovoltaic cells are permanently embedded in the top of the sprayhead with a clear version of Terreon®

The ndite power management module is a proprietary unit that stores and provides power to the sensors and solenoid. This efficient module allows the system to work without batteries, eliminating the need to change or dispose of batteries.

Each ndite™ powered sensor uses a conical shaped transmitting beam, having a detection area adapted to, but not exceeding the bowl perimeter. The detection area projects forward 15° to each side and 15° below horizontal. The adaptive infrared sensor automatically adapts to the bowl after power is turned on. The electronically activated solenoid valve has few moving parts providing reliable operation that is unaffected by most chemicals and minerals often present in municipal water supplies. Each lavatory system is powered by one ndite™ power management module.

Bradley
P.O. Box 309, Menomonee Falls, WI 53052-0309
Phone 414-251-6000 FAX 414-251-5817
http://www.bradleycorp.com

Document No. 1051

This information is subject to change without formal notice.
7-21-2005 (6 pages total)

Express® Lavatory System — MG-Series
Model MG-2

Sample Specifications

The modular multiple lavatory system shall provide 2 hand washing stations, with the centerline of each station located on 30″ centers, perpendicular to the mounting wall. Each hand washing station shall comply with ANSI and ADA accessibility standards.

- bowl and sprayhead material for each station shall be constructed of NAHB Certified Terreon, complying with ANSI Z124.3, Z124.6 and ANSI/ICPA SS-1-2001. Bowl, sprayhead and pedestal end caps finish shall be decorative stone.
- bowl color: Empire Gray (other colors available).
- lavatory stations shall be secured to a rigid base consisting of a 1 piece welded stainless steel subframe which shall support all hand washing stations to ANSI Z124.3 load ratings. Supply and waste connections shall be fully concealed within the frame.
- all supply and waste connections shall be concealed within the frame.
- unit sprayhead assembly to be one-piece design, pre-plumbed and pre-wired and and shall provide dry surface ledge above water spray area.
- contoured access panel shall be 300 series stainless steel.
- lavatory system shall include plug-in transformer, all waste and supply connections to wall, and thermostatic mixing valve with stop, strainer and check valves.

Express® Model MG-2/IR

- each hand washing station shall have an aerator served by an independent solenoid valve and actuated by an infrared sensing module with conical transmitting beam.Each sensor shall have a 2-3 second turn-off delay; and automatic shutoff after 30-45 seconds of continuous operation.

Express® Model MG-2/AST4

- each hand washing station shall have a water aerator served by an independent air-metering valve which is actuated by a pushbutton.

Express® Model MG-2/TT

- each hand washing station shall have a streamformer served by a pushbutton and independent Touch Time™ electronic metering valve.

Express® Model MG-2/BIR3

- individual infrared controls powered by lithium batteries (batteries included) concealed inside a battery holder with electronically activated solenoid valve.

Express® Model MG-2/NDT

- Individual infrared controls powered by ndite™ technology. Not requiring any AC power connections or batteries. ndite technology provides power through the use of photovoltaic cells to convert light to electricity.

* a lavatory system does not include items such as; fasteners, wall anchors, or other components that are job specific.

Document No. 1051

This information is subject to change without formal notice.
7-21-2005 (6 pages total)

Bradley
P.O. Box 309, Menomonee Falls, WI 53052-0309
Phone 414-251-6000 FAX 414-251-5817
http://www.bradleycorp.com

Express® Lavatory System — MG-Series

Model MG-2

MODEL

Must select one

Model No.	Description
☐ MG-2	Express® Lavatory System-Two Station

STANDARD SELECTIONS

Must select one from each category

Sprayhead:

- ❑ **IR** — Sprayhead w/Infrared Control*
- ❑ **AST4** — Sprayhead w/Air Valve Control*
- ❑ **TT** — Sprayhead w/Touch Time™ Control*
- ❑ **BIR3** — Sprayhead w/Battery Operated Infrared Control*
- ❑ **NDT** — Sprayhead w/ndite™ Powered Infrared Control*

Soap Dispenser (Select One):

- ❑ **LSD-2** — Liquid Soap Dispenser (MG-2)
- ❑ **NSD** — No Soap Dispenser

Water Supply (Select One):

- ❑ **TMA** — Vernatherm™ Thermostatic Mixing Assembly (Hot and Cold Supplies)
- ❑ **TL** — Single Tempered Line

Heaters Not Available with BIR3 or NDT Activations

- ❑ **HEAT277** — Electric Tankless Water Heater, 277 volts
- ❑ **HEAT240-208** — Electric Tankless Water Heater, 240/208 volts

* ADA compliant (see mounting height options).
TAS compliant (see rough-in information).

Standard Selections....*Continued*

Color of Terreon® Bowl/Sprayhead/End Caps (Select One):

Standard Colors

- ❑ **E-GRAY** — Empire Gray
- ❑ **BONE** — Mesa Bone
- ❑ **PEP-WHT** — Peppered White
- ❑ **SAND** — Sandtrap
- ❑ **DS-WHT** — Designer White
- ❑ **CHAR** — Charcoal Gray
- ❑ **JADE** — Jade
- ❑ **GRAPH** — Graphite
- ❑ **LANNON** — Lannonstone
- ❑ **COBBLE** — Cobblestone
- ❑ **WHT-SAND** — White Sand
- ❑ **FIESTA** — Fiesta
- ❑ **LONDON** — London Gray
- ❑ **O-TAUPE** — Organic Taupe

Designer Colors **

- ❑ **ARC-CHIP** — Arctic Chip
- ❑ **S-SAGE** — Summer Sage
- ❑ **RIVER** — Riverstone
- ❑ **MYSTIC-M** — Mystic Moss
- ❑ **STAR-D** — Stardust
- ❑ **COFFEE** — Coffee Bean
- ❑ **CORN** — Cornfield
- ❑ **BLUESKY** — Blue Sky
- ❑ **HILLSIDE** — Hill Side
- ❑ **MOUNTAIN** — Mountain Top

Optional Selections

P-Trap:

- ❑ **S-CHROME** — Single Chrome Plated P-Trap

** Designer colors available at an additional charge.

*** For more information on Terreon Waste Receptacles for the Express MG-Series see Document No. 1105.

Document No. 1051

This information is subject to change without formal notice.

7-21-2005 (6 pages total)

Bradley

P.O. Box 309, Menomonee Falls, WI 53052-0309
Phone 414-251-6000 FAX 414-251-5817
http://www.bradleycorp.com